UltraTop 34 HD

FEATURES

Steer tube diam.: 1' 1/8 (28,6mm).
Upper frame head tube bore diam.: 33.90-33.95mm.
Upper bearing: stainless bi-directional.
Sealing: 2 bearing seals + 1 external o-ring.
Body: CNC 7075 T6.
Destination: MTB and Road use.

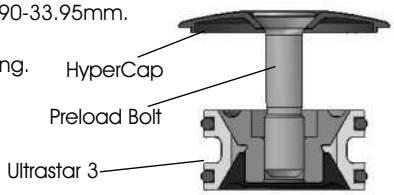

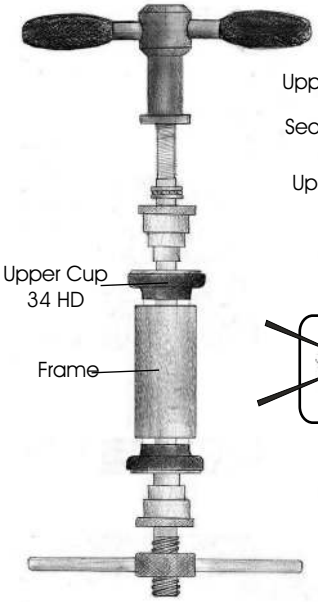

-FIG.2-

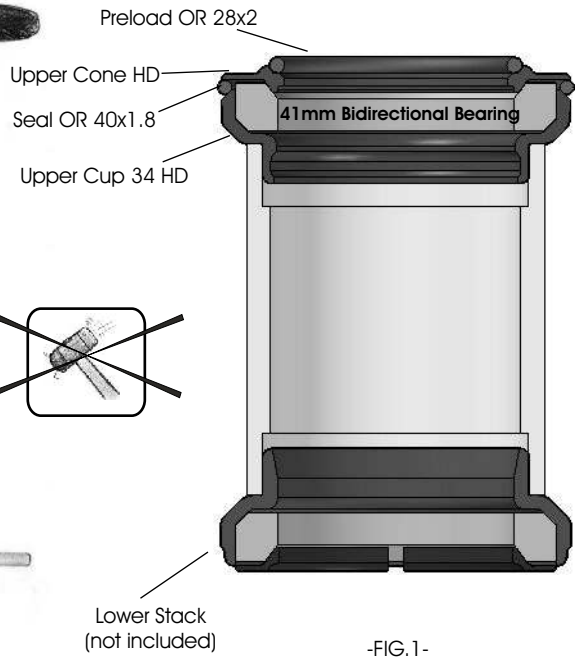

-FIG.1-

1. FRAME HEAD TUBE PREPARATION:

Ream and face the head tube, both ends should be square and parallel to each other (+/-0.1mm).
Bore headset fittings at 33.90 - 33.95mm. Correct interference between frame and headset cups should be 0,02 to 0,06mm.
Carefully remove internal sharp edges to prevent damages when installing Upper and Lower Cups (use a thin round file or sand paper). Clean well before greasing.

2. INSTALLATION

Slide into headset installation tool the headset parts as shown in Fig.2.
Do not insert Upper and Lower Cone when installing Upper and Lower Cup.
Grease the frame contact area and both Upper and Lower Cups inserts, then install paying attention they get inserted well aligned.
Now slip the External Seal temporary under the Upper Cup (on the frame).

3. FORK STEER TUBE CUTTING:

Do not cut the fork tube before you have carefully determined its correct length as follows.
Mark a line on steer tube after having properly pre-assembled fork, headset, spacers and stem.
Then remove fork and cut steer tube 3mm below line marking.
After cutting remove all sharp edges from inside and outside the tube.

4. ULTRASTAR 3 INSTALLATION:

File the top of the steer-tube to avoid sharp edges.
Hold lower cone (Red) with your fingers.
Use 8mm allen key to screw in top cone (Bronze) until you can fully insert Ultrastar into the steer tube with mild hand pressure.
Insert and tighten Ultrastar (7-8Nm) in the steer tube at 5 to 10mm from the top.

5. ADJUSTMENT:

Screw-in the Preload Bolt through the HyperCap into the UltraStar 3 with extremely light torque (Max 2Nm).
Adjust bearing play, when properly adjusted the headset will rotate smoothly without play or remarkable stiction.
Grease the External Seal and insert it in place, between the Upper Cone and the Upper Cup.
Re-execute the operation above every time you untight stem and/or preload bolt.
After first few rides readjust bearing play.

6. MAINTENANCE:

Service every year or more often according to riding conditions.
Bearing can be fully disassembled as follows: remove main seals, flush balls and races, clean and grease before re-assembling.
Re-install upper bearing with internal cone upward (toward Upper Cone). Grease contact areas and External Seal.
Spare bearings and ORing seal kits are available.

Studio Riva SRL
Tel: ++39-0371-203059

info@extralite.com

EXTRALITE

Extralite Limited Warranty

Extralite products are warranted against defects in materials and/or workmanship for a period of two years from original date of purchase to the original owner only.
Any Extralite product that is returned and found by Studio Riva to be defective in materials and/or workmanship will be repaired or replaced at the sole discretion of Studio Riva. This warranty is the sole and exclusive remedy.
Studio Riva shall not be held liable for any indirect, special or consequential damages.
The warranty is expressly limited to repair or replacement of the product that has been returned and found to be defective by Studio Riva and are the sole remedy of the warranty.
No credits or refunds will be issued.
The warranty does not cover: normal wear, tear and fatigue; damage or failure due to accident or collision. Improper assembling, poor maintenance, alterations or modifications, installation of parts not compatible with Extralite products void this warranty.
Warranty does not cover damage arising from crash, abuse and/or misuse or any other circumstances in which the product had been subjected to forces or loads beyond its design.
Immediately replace the component after crash and violent shock, or after continuos heavy use.
Improper use, modification and/or part changing, including surface finishing, could irreparably damage the component.
All labor charges for warranty service are responsability of the product owner.

INSTALLATION WARNING:

Extralite components are extremely performing and lightweight, crafted with very high quality, they request adequate installation and maintenance care.
We strongly recommended that a professional bike shop install and service your Extralite components.
Improper assembly and/or adjustment may significantly compromise strength and durability of the component causing serious personal injury.
Carefully check proper tightening torque of every bolt.
Always respect installation recommendations.
Extralite components are designed for a specific use
X-Country or Road or Downhill, respect product specific destination.

Note: the rider assumes all the risks regarding use and installation of Extralite components.